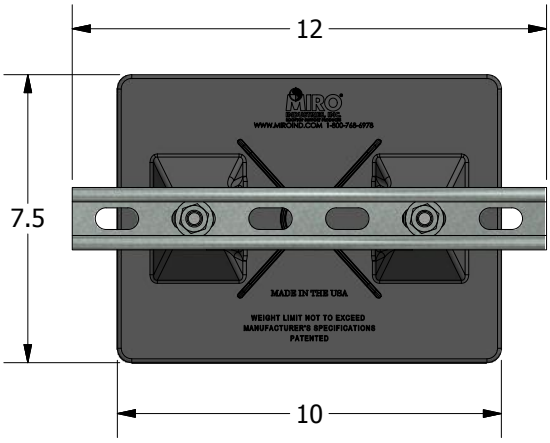

TOP VIEW

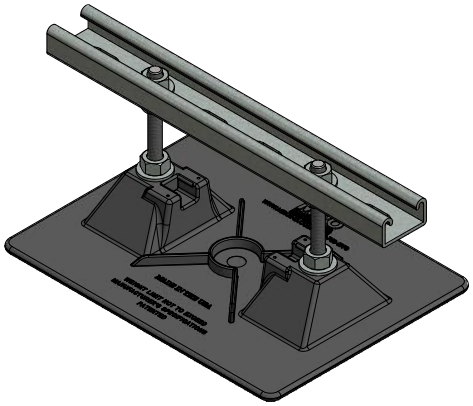

ISOMETRIC VIEW

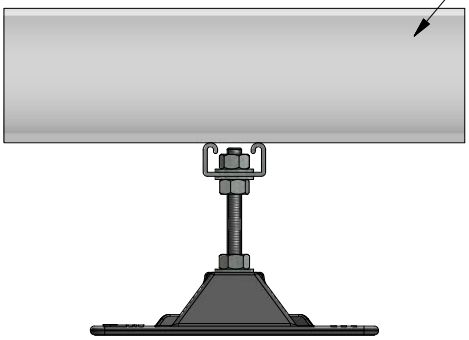

SIDE VIEW

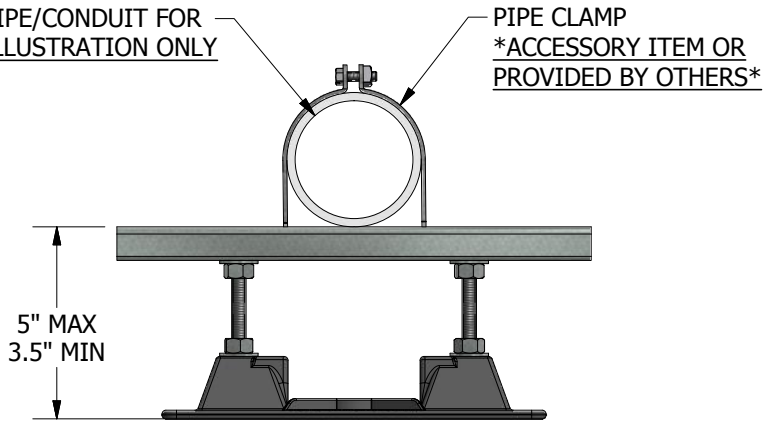

END VIEW

ACCESSORIES

- Pipe Clamp/Strap - Order to Pipe O.D.
- Support pad or deck plate
- Eternabond® 2-sided tape

PRODUCT DESCRIPTION

A pipe support with "strut" used to support roof-mounted electrical conduit, solar piping, gas pipes and other mechanical piping. Pipes rest on a 12" length of strut which is mounted on the base. The pipes can be fastened by using the appropriate pipe clamp.

KEY INFORMATION

- Designed to support conduit (ganged) cable trays or other mechanical piping.
- Adjustable height from 3-1/2" to 5", even load required, maximum load is 115 lbs.
- 12 per case, 28 lbs. per case
- Recommended spacing is not to exceed 10 feet centers depending upon the load. Make certain each stand is properly elevated to even load weight at all stands.
- Base Material: Polycarbonate
- All metal parts are either stainless steel or hot-dip galvanized.

This document, attachments, and all of the information therein are the property of MIRO Industries, Inc. The information contained is loaned, subject to return upon demand, and is not to be used directly or indirectly in any way detrimental to our interest. Further, the information contained therein shall not be used, in whole or in part, except when allowed by written authorization from MIRO Industries, Inc.